NEXT DOOR® COMPANY

Complete required fields and the applicable following pages then email to nextdoor.sales@allegion.com or fax to 954.772.8466

Order Form for Stainless Steel Doors

First Name:	
Last Name:	
Company Type:	
Company:	
Address 1:	
Address 2:	
City:	
State:	
ZIP:	
Phone:	
Fax:	
Project Name:	
Project Location:	

Additional Notes:

Order Form for Stainless Steel Doors

QTY: _____ TAG: _____

SWING: ☐ LH ☐ RH ☐ LHR ☐ RHR

GAUGE: ☐ 18 ☐ 16 ☐ 14

MATL: ☐ 304 #4 FINISH ☐ 316 #4 FINISH

VERTICAL EDGE:

☐ LOCKSEAM (VISIBLE SEAM)

☐ SEAMLESS (WELDED EDGE)

CORE:

☐ POLYSTYRENE

☐ HONEYCOMB

☐ POLYURETHANE

☐ STEEL STIFFENED

☐ TEMPERATURE RISE

FIRE: ☐ WH-180 MIN ☐ WH-90 MIN ☐ WH-45 MIN ☐ WH-20 MIN ☐ WH-90 MIN + 450 TEMP RISE

TOP AND BOTTOM CHANNELS:

☐ INVERTED U

☐ CAP FLUSH SILICONE SEAL TOP ONLY

☐ CAP FLUSH SILICONE SEAL TOP & BOTTOM

☐ CAP FLUSH TOP & BOTTOM FULL WELD/FINISH

FOR PHARMA MUST BE SEAMLESS EDGE AND 16 GA SKINS

HARDWARE: INCLUDE TEMPLATES

HINGES: MODEL: _____ SIZE: _____

LOCK/EXIT DEVICE: MFR: _____

MODEL: _____

TRIM: _____

CLOSER: MFR: _____ MODEL: _____

FLUSH BOLT: MFR: _____ MODEL: _____

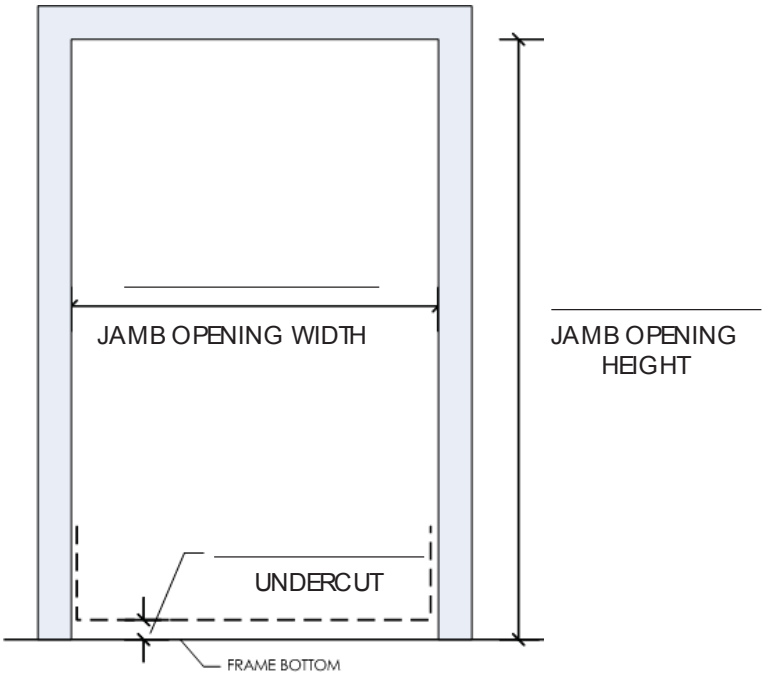

LEAF IS ONE OF A PAIR: ☐ YES ☐ NO

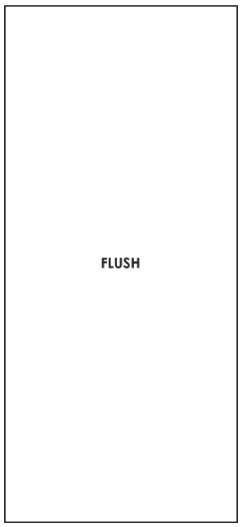

ELEVATION:

☐ FLUSH

☐ OTHER SEE FORM: _____

LOCATIONS:

☐ NEXT DOOR STANDARD

☐ STEELCRAFT ☐ CECO

☐ CURRIES ☐ PIONEER

☐ OTHER SEE FORM: _____

Order Form for Stainless Steel Doors

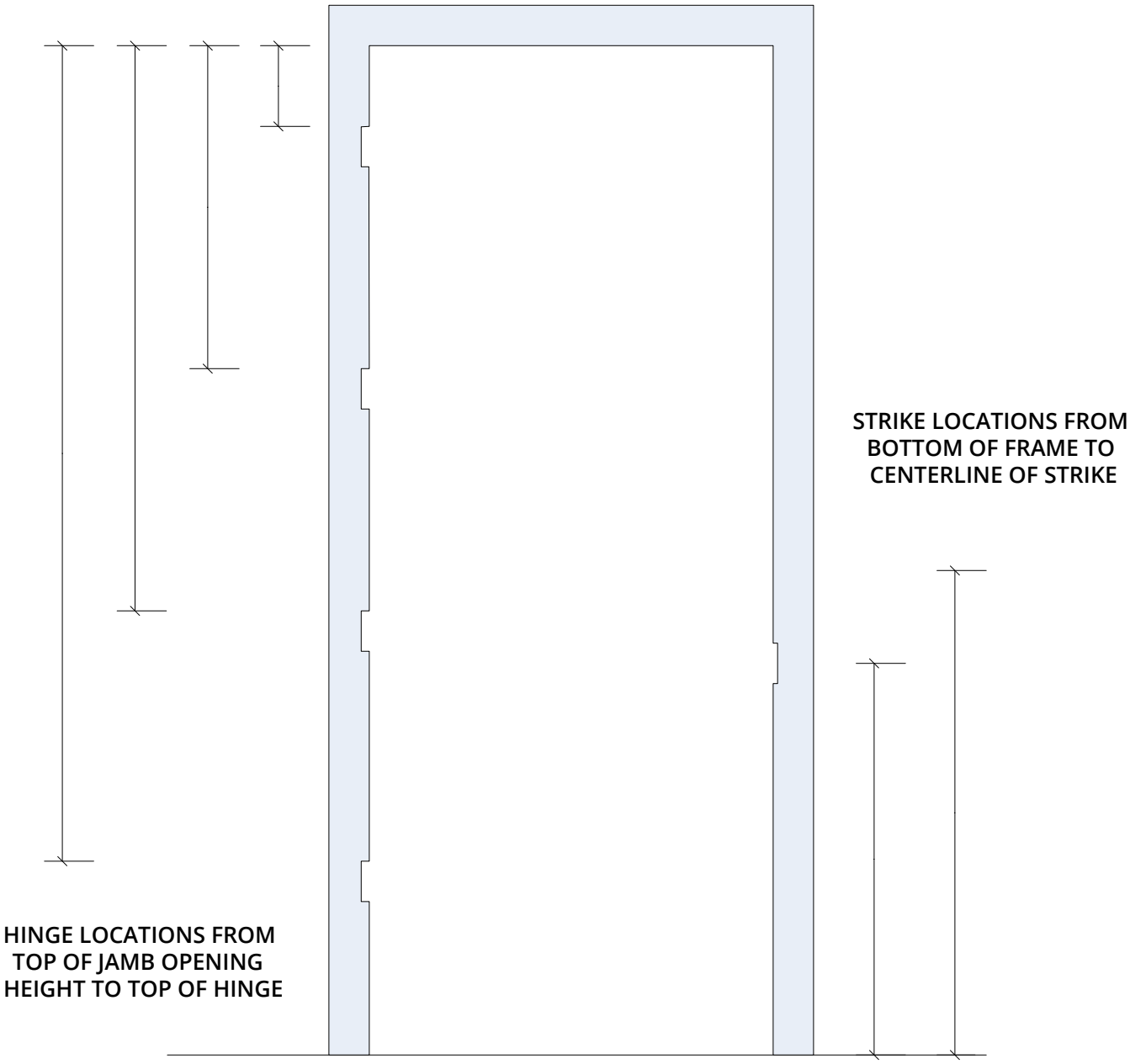

Order Form for Stainless Steel Doors

DOOR ELEVATIONS HEIGHTS >= 84"

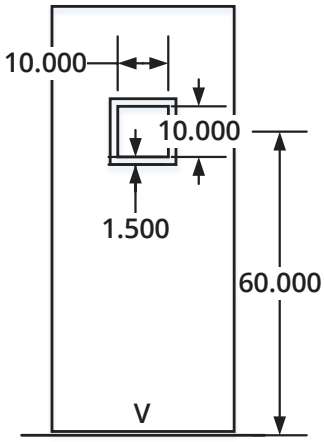

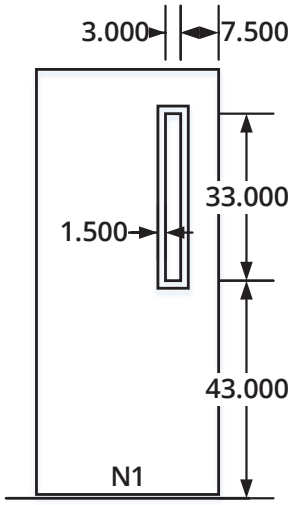

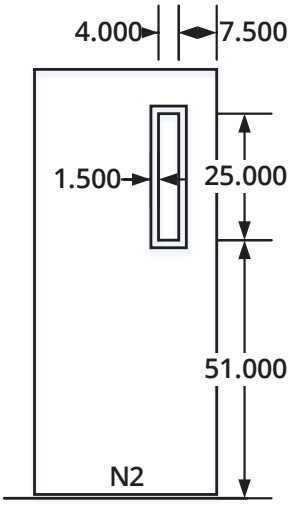

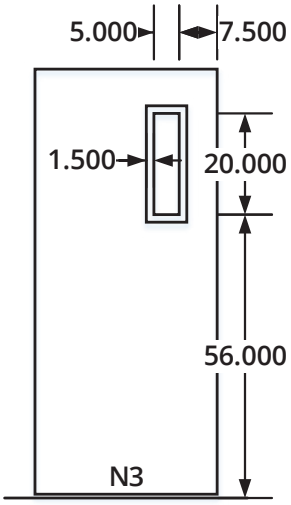

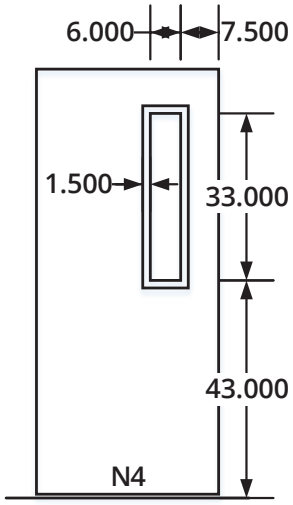

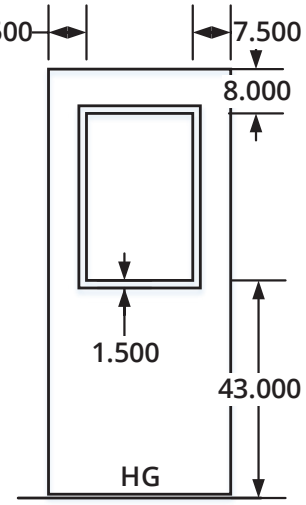

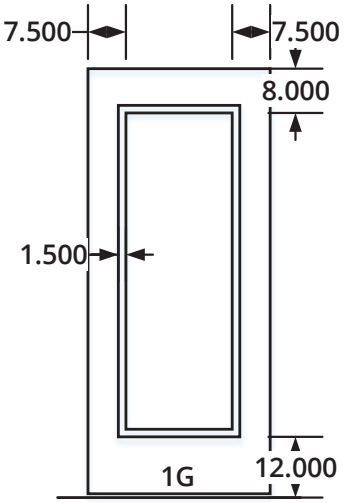

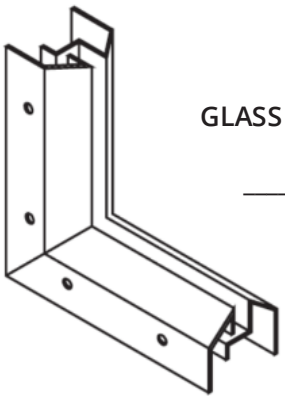

GLASS THICKNESS
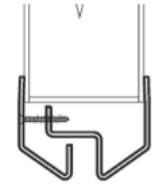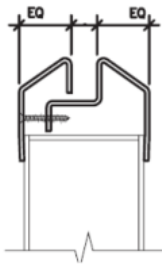
_____